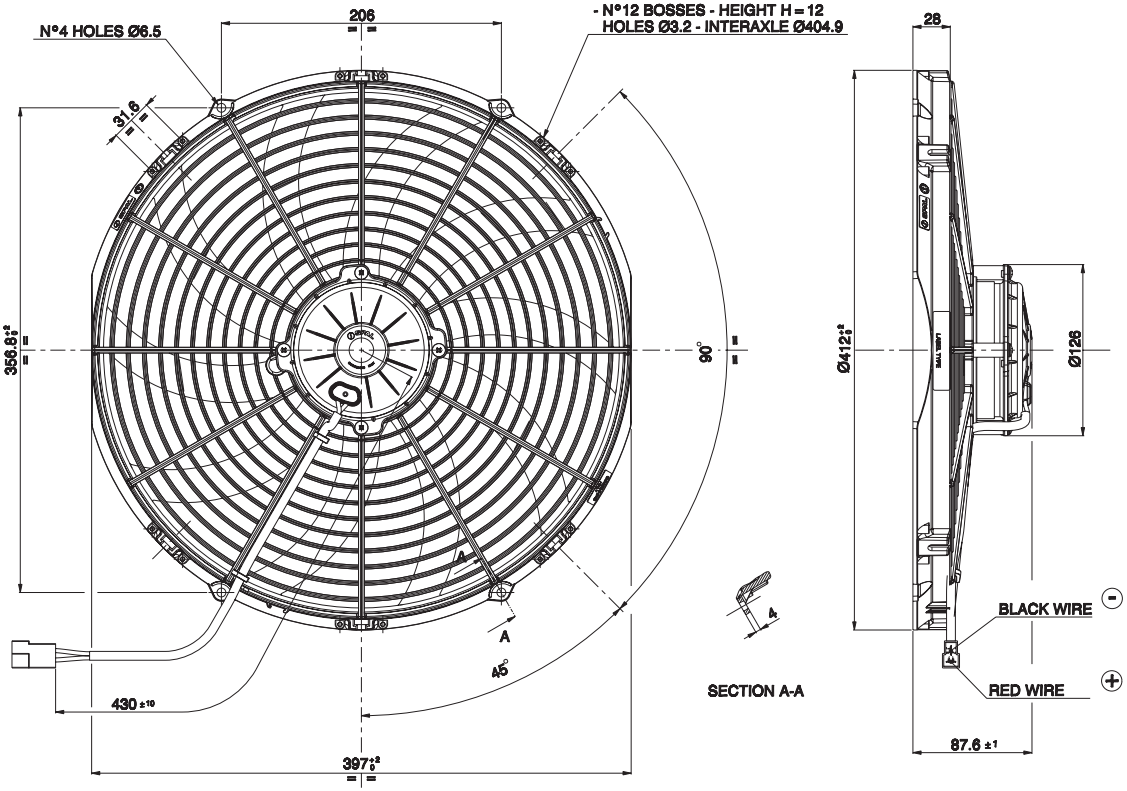
N°4 HOLES Ø6.5
206
- N°12 BOSSES - HEIGHT H = 12
HOLES Ø3.2 - INTERAXLE Ø404.9
28
31.6
356.8 ±2
90°
Ø412 ±2
Ø126
A
A
45°
430 ±10
397 ±2
SECTION A-A
BLACK WIRE
RED WIRE
87.6 ±1