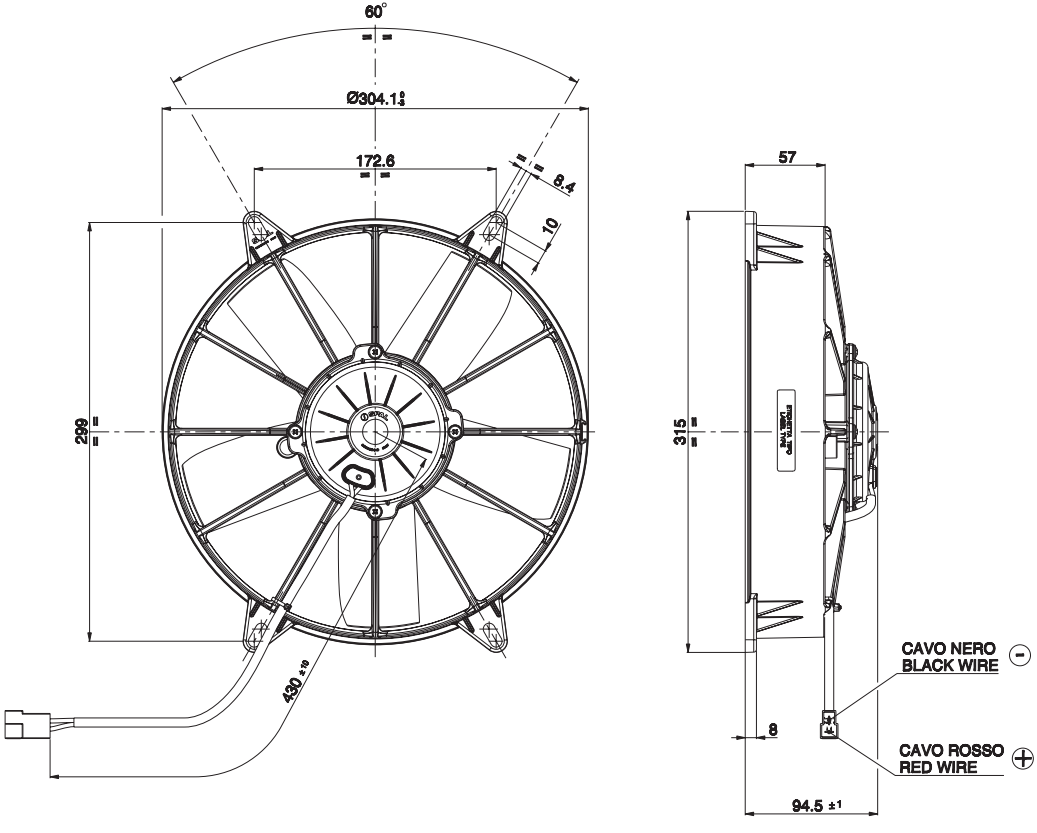
60°
Ø304.1
172.6
8.4
10
299
430 ±10
57
315
8
94.5 ±1
CAVO NERO
BLACK WIRE
CAVO ROSSO
RED WIRE