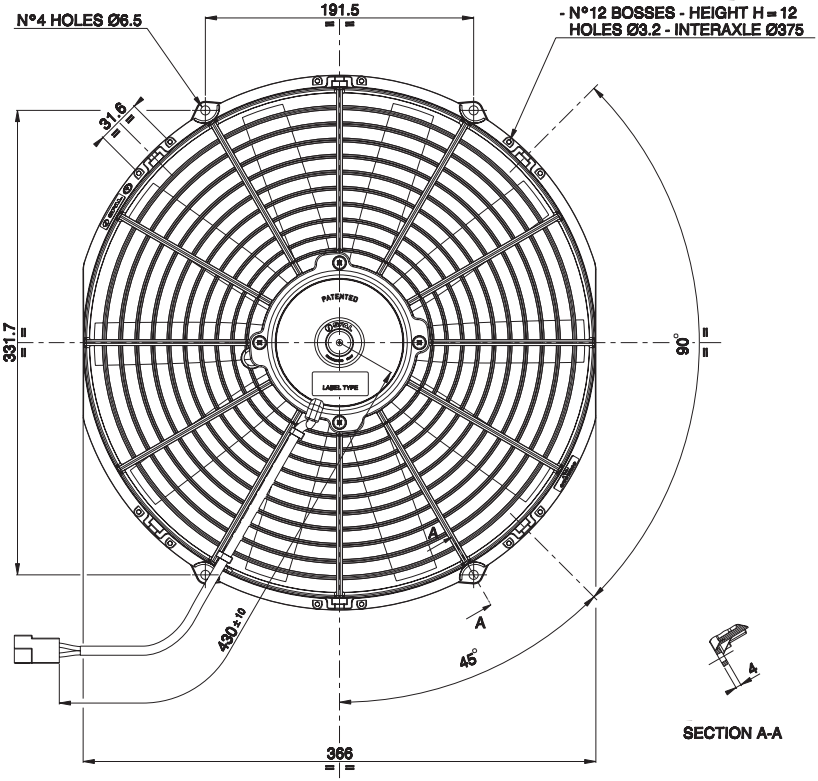
N°4 HOLES Ø6.5
191.5
- N°12 BOSSES - HEIGHT H = 12
HOLES Ø3.2 - INTERAXLE Ø375
31.6
331.7
PATENTED
LABEL TYPE
90°
A
A
430±10
45°
366

A

SECTION A-A

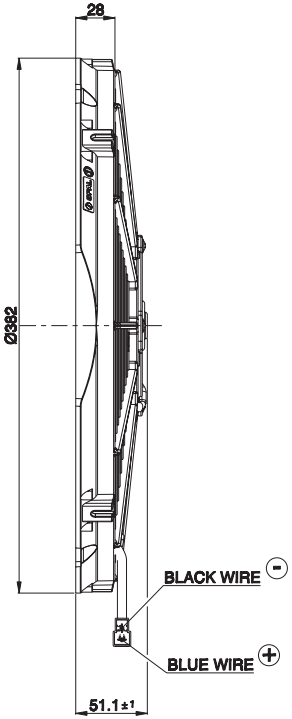
28
Ø382
BLACK WIRE ⊖
BLUE WIRE ⊕
51.1±1