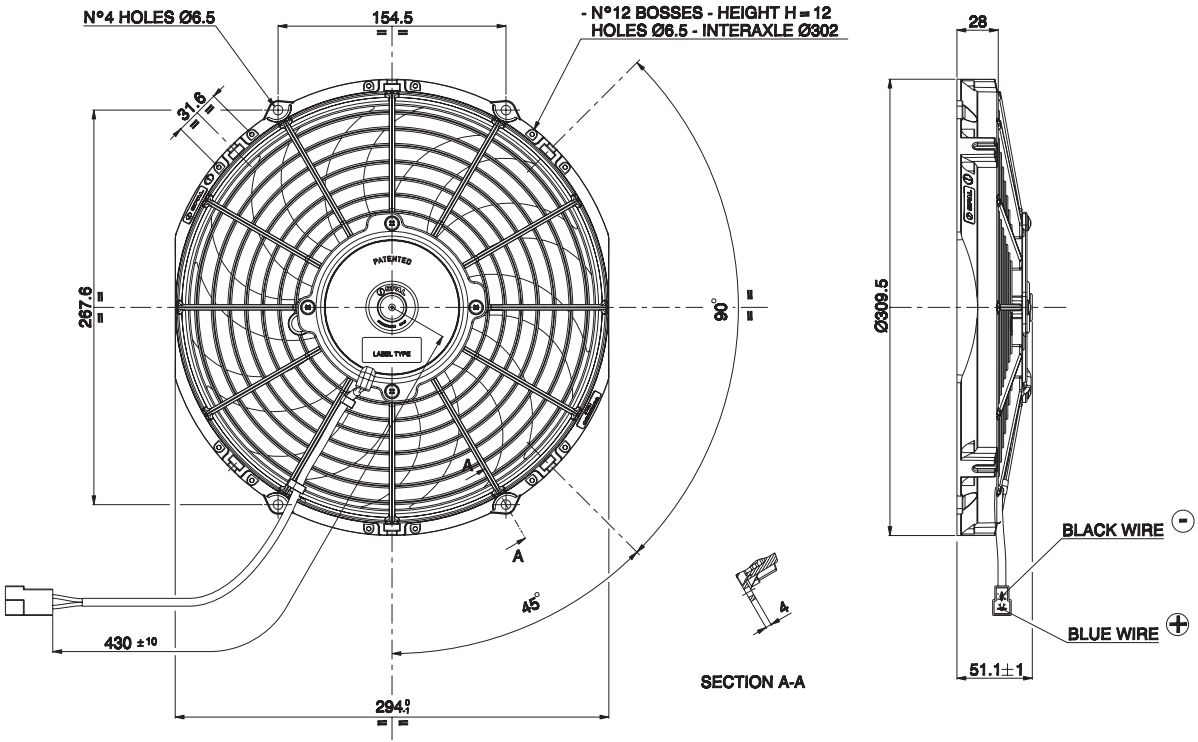

N°4 HOLES Ø6.5
154.5
- N°12 BOSSES - HEIGHT H = 12
HOLES Ø6.5 - INTERAXLE Ø302
28
31.6
267.6
90°
Ø309.5
PATENTED
LABEL TYPE
A
A
45°
430 ±10
294.0
4
SECTION A-A
BLACK WIRE
BLUE WIRE
51.1±1