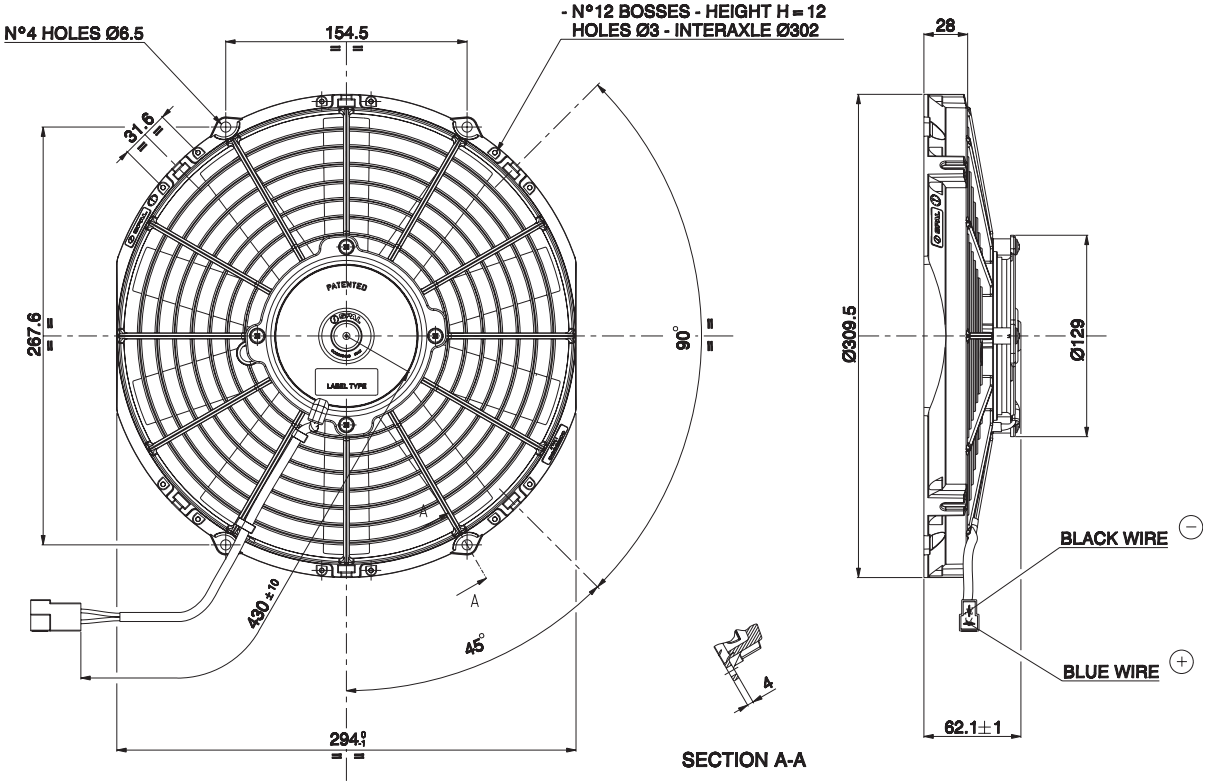
N°4 HOLES Ø6.5
154.5
- N°12 BOSSES - HEIGHT H = 12
HOLES Ø3 - INTERAXLE Ø302
28
31.6
267.6
90°
PATENTED
LABEL TYPE
A
A
430 ±10
45°
294.0
-1
Ø309.5
Ø129
BLACK WIRE
BLUE WIRE
4
62.1±1
SECTION A-A